Precise guided implantation of pedicle screws by using the VENUS®navi instruments

Dr. med. Frank Hassel, Dr. Oliver Huwert, Dr. Jörg Beck, Dr. Uwe Schorer, Dr. Gabriel Wetzel

Loretto-Krankenhaus, Freiburg

RKK KLINIKUM

Introduction

The aim of this work is to confirm the correct positioning and the accuracy of the navigated pedicle screw placement when using navigable VENUS®navi instruments.

Material and Methods

62 patients (21 Men, 41 Women) with fractures, instabilities and/ or stenoses in the spine underwent a dorsal spondylodesis with an internal fixation during the period from August 2017 to end of September 2018 at the Loretto-Krankenhaus in Freiburg im Breisgau. The average patients‘ age was 68,3 (range: from 35 till 86 years).The location of the instrumentation ranged from thoracic vertebrae 10 to sacral vertebrae 1. 418 screws were placed with the help of navigable VENUS®navi instruments.

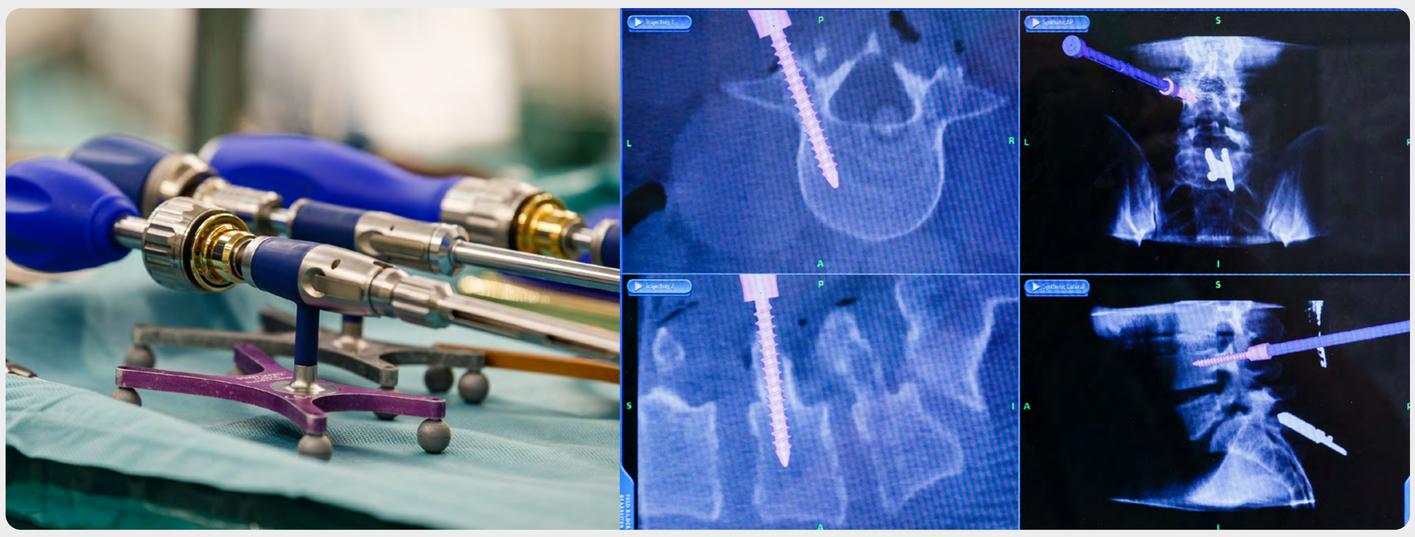

VENUS®navi instruments

Cannulated Awl – Navi

MIS Polyaxial Screwdriver – Navi

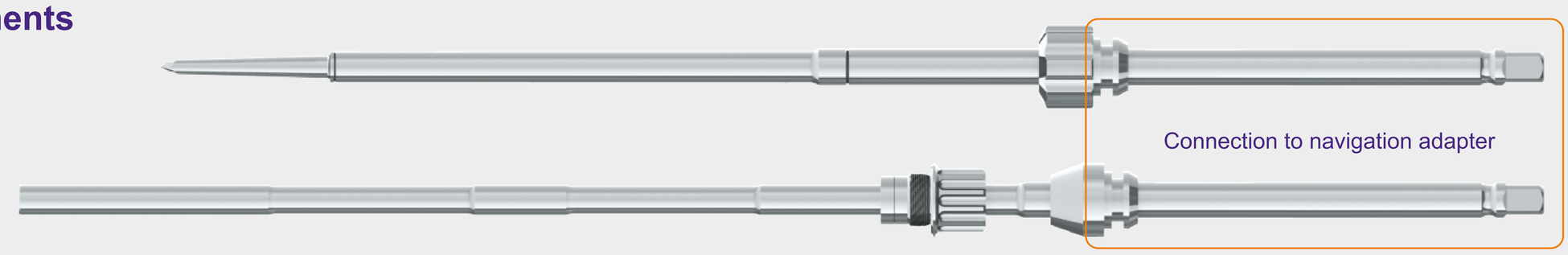

Surgical Technique

The operation takes place in a prone position of the patient. The intraoperative CT and the system‘s camera are positioned. The necessary navigable instruments, awl and screw driver, are presented to the system and as soon as the instrument testing is completed can be used.

Over a median cut the spine is prepared and the reference star is placed on a spinous process. The reference 3D-scan is performed.

The precise pedicle preparation is done with the navigable cannulated Awl by controlling its trajectory on the screen of the navigation system. Optional a guide wire can be inserted through the cannulated awl.

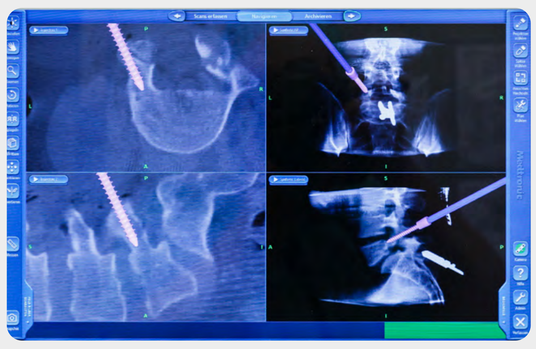

The required pedicle screw is mounted on the navigable screw driver. The diameter as well as the length of the required screw is set in the navigation system. Now the pedicle screw can be exactly implanted and its correct position can be confirmed by means of the VENUS®navi instruments.

Results

All of the pedicle screws (418) implanted when using navigable VENUS®navi instruments and a corresponding navigation system were positioned correctly medially and intrapedicular. The evaluation of the accuracy showed an average lateral angulation of 6,3° ± 4,3° of the pedicle with regard to the cranial endplate of the instrumented vertebrae.

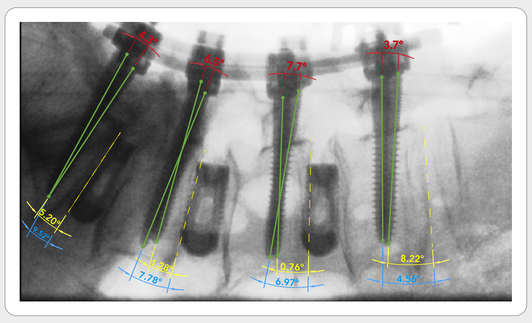

Discussion

Malpositioning of pedicle screw is a common complication in conventional spinal surgeries [13,4% (Laine); 23% (Rajasekaran); 28% (Gertzbein)*]. By using VENUS®navi and a corresponding navigation system the percentage of pedicle screw malpositioning can be significantly reduced down to 0 malpositioned out of 418 implanted screws. The accuracy of the pedicle screws is also very high and therefore the use of VENUS®navi is recommended as well to improve the accuracy of the implanted pedicle screws.
To confirm the results of the present study and to increase the evidence level, more patients as well as other surgeons should perform surgeries with the VENUS®navi and a corresponding navigation system. An evaluation of the accuracy of pedicle screw positions should be done as well for conventional spinal surgeries.

* Nai-Feng Tian ed al. Eur Spine J (2011) 20:846-859 Pedicle screw insertion accuracy with different assisted methods: a systematic review and meta-analysis of comparative studies

With the kind support of the HumanTech Spine GmbH, Germany, Steinenbronn